U.S. COAST GUARD CUTTERS

C.G. 65-71

No. 65 GEORGE W. CAMPBELL
No. 66 SAMUEL D. INGHAM
No. 67 WILLIAM J. DUANE
No. 68 ROGER B. TANEY
No. 71 GEORGE M. BIBB
No. 69 ALEXANDER HAMILTON
No. 70 JOHN C. SPENCER

RESTRICTED

NUMBER & ORDER OF SHEETS	
1	COVER & TITLE PAGE
2	OUTBOARD PROFILE
3	INBOARD PROFILE
4	BRIDGES
5	MAIN DECK
6	SECOND DECK
7	PLATFORM DECK
8	HOLD

CORRECTED TO SUIT SHIP		
PLACE	DATE	CONSTRUCTION OFFICER

BOOKLET
OF
GENERAL PLANS
PREPARED AT NAVY YARD, PHILADELPHIA

DRAWN BY T.K. Morgan
TRACED BY Morgan
ASSOC. NAV. ARCH. Hill
NAVAL ARCH. CH. OF DIV. ____________
DATE ____________

PRIN. NAVAL ARCHITECT

CONSTRUCTOR U.S.C.G.

CAPTAIN (C.C.) U.S.N. MANAGER

C.G. 6571-0101-20 SHEET No. 1 OF 8

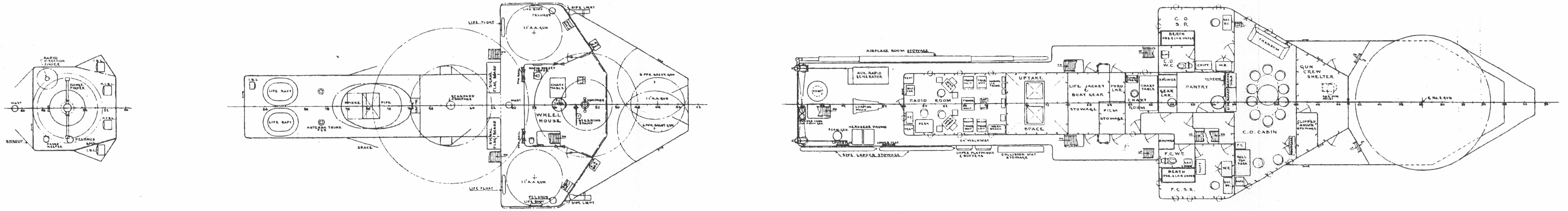

RADIO DIRECTION FINDER
MAST
SHROUD
RANGE FINDER
PELORUS
RANGE KEEPER
LIFE FLOAT
SIDE LIGHT
1.1" A.A. GUN
LIFE RAFT
ANTENNA TRUNK
BRACE
PIPE
STANDARD COMPASS
SIGNAL FLAG BAG
WHEEL HOUSE
CHART TABLE
STEERING STAND
5" FIRE CONTROL
AIRPLANE BOOM STOWAGE
AUX. RADIO GENERATOR
LOADING MACH.
FOAM GEN.
KEROSENE DRUMS
SIDE LADDER STOWAGE
RADIO ROOM
DESK
24" WALKWAY
UPPER PLATFORMS & BUFFERS
COLLISION MAT STOWAGE
UPTAKE SPACE
LIFE JACKET & BOAT GEAR STOWAGE
PYRO LKR.
FILM STOWAGE
CHART TABLE
CHART ROOM
C.O. S.R.
BERTH
C.O. W.C.
SHOWER
GEAR LKR.
PANTRY
TRANSOM
C.O. CABIN
F.C. W.C.
F.C. S.R.
ROLL TOP DESK
GUN CREW SHELTER
CLIPPER AMMN. STOWAGE
℄ No. 2 GUN

U.S. COAST GUARD CUTTERS
CG. 65-71
BRIDGES
SCALE = 1/8" = 1 FT.

C.G. 6571-0101-20 SHEET No. 4 OF 8

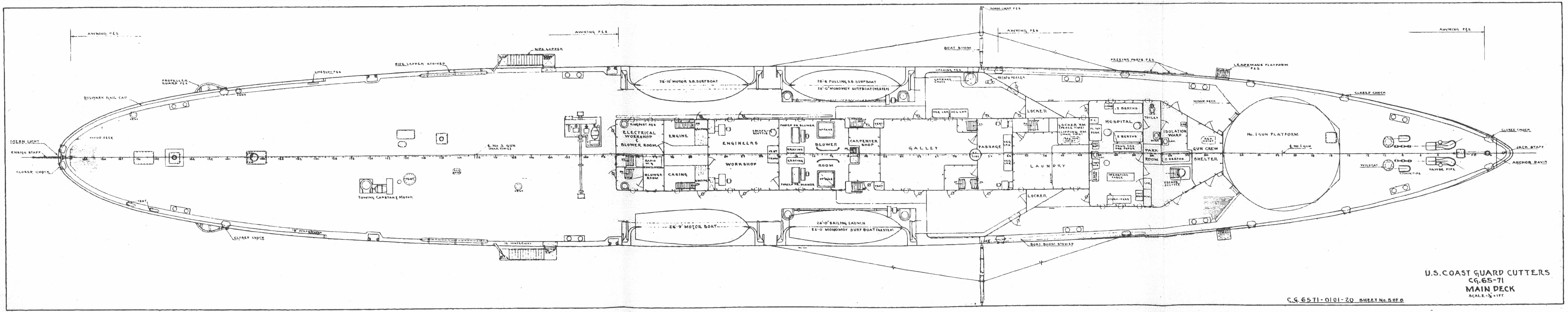

AWNING P&S
SIDE LADDER
SIDE LADDER STOWED
PROPELLER GUARD P&S
BULKWARK RAIL CAP
STERN LIGHT
ENSIGN STAFF
CLOSED CHOCK
WOOD DECK
TOWING CAPSTAN & MOTOR
℄ No. 3 GUN
26'-10" MOTOR S.B. SURFBOAT
26'-6" PULLING S.B. SURFBOAT
26'-0" MONOMOY SURFBOAT (NESTED)
26'-9" MOTOR BOAT
26'-0" SAILING LAUNCH
26'-0" MONOMOY SURFBOAT (NESTED)
BOAT BOOM
BOAT BOOM STOWED
ELECTRICAL WORKSHOP & BLOWER ROOM
ENGINE
CASING
BLOWER ROOM
RADIO M.G.
ENGINEERS WORKSHOP
FORCED DR. BLOWER
BLOWER ROOM
UPTAKE
GRATING
CARPENTER SHOP
GALLEY
GARBAGE CHUTE
POTATO PEELER
VEG. LKR.
PASSAGE
LOCKER
LAUNDRY
LOCKER RM. (PEACE TIME)
CLIPPING RM. (WAR TIME)
HOSPITAL
2 BERTHS
OPERATING TABLE
STERILIZERS
TOILET
ISOLATION WARD
PARK ROOM
ESCAPE SCUTTLE
GUN CREW SHELTER
No. 1 GUN PLATFORM
FREEING PORTS P&S
LEADSMANS PLATFORM P&S
CLOSED CHOCK
WILDCAT
HAWSE PIPE
JACK STAFF
ANCHOR DAVIT

U.S. COAST GUARD CUTTERS
CG. 65-71
MAIN DECK
SCALE = 1/8" = 1 FT.

C.G. 6571-0101-20 SHEET No. 5 OF 8

GENERAL INFORMATION

LENGTH BETWEEN PERPENDICULARS	308'-0"
LENGTH OVER ALL	327'-0"
BREADTH MOLDED EXTREME (FRS 76-78) AT DWL	41'-0"
DRAFT ABOVE BOTTOM OF KEEL (DESIGNED)	12'-6"
RUDDER AXIS	FR 146
CENTER OF PROPELLERS	FR 142
CENTER OF STRUTS	5'-0" FWD FR 147
DISTANCE BETWEEN FOREMAST AND STUBMAST	11'-9"

HEIGHT ABOVE D.W.L. (12'6" ABOVE BOTTOM KEEL)

TOP OF FLAG & PENNANT STAFF CAP FOREMAST	114'-7⅛"
TOP OF STUBMAST	51'-0⅝"
TOP OF TRUCK LIGHT FOREMAST	112'-2½"
ELECTRIC RANGE LIGHT	74'-0"
ELECTRIC MASTHEAD LIGHT	53'-0"
MAIN DECK AT STERN	13'-10¼"
UPPER DECK ABOVE MAIN DECK (MOLDED)	7'-9"
NAVIGATING BRIDGE ABOVE UPPER DECK (MOLDED)	9'-3"

COMPLEMENT

FORCE COMMANDER	1
CAPTAIN	1
WARDROOM	9
WARRANT OFFICERS	4
CHIEF PETTY OFFICERS	14
ENLISTED MEN	98
	TOTAL = 127

SMALL BOATS

		EACH	TOTAL
1	26'-0" SAILING LAUNCH		
1	25'-6" PULLING S.B. SURFBOAT		
2	26'-0" MONOMOY SURFBOAT		
1	26'-6" MOTOR BOAT		
1	25'-10" MOTOR S.B. SURFBOAT		

TOTAL ACCOMMODATION

FIRE PLUGS

MAIN DECK	4	ENGINE ROOM	1
2ND. DECK	5	AUX. MACH. ROOM	1
BOILER ROOM	1		TOTAL: 12

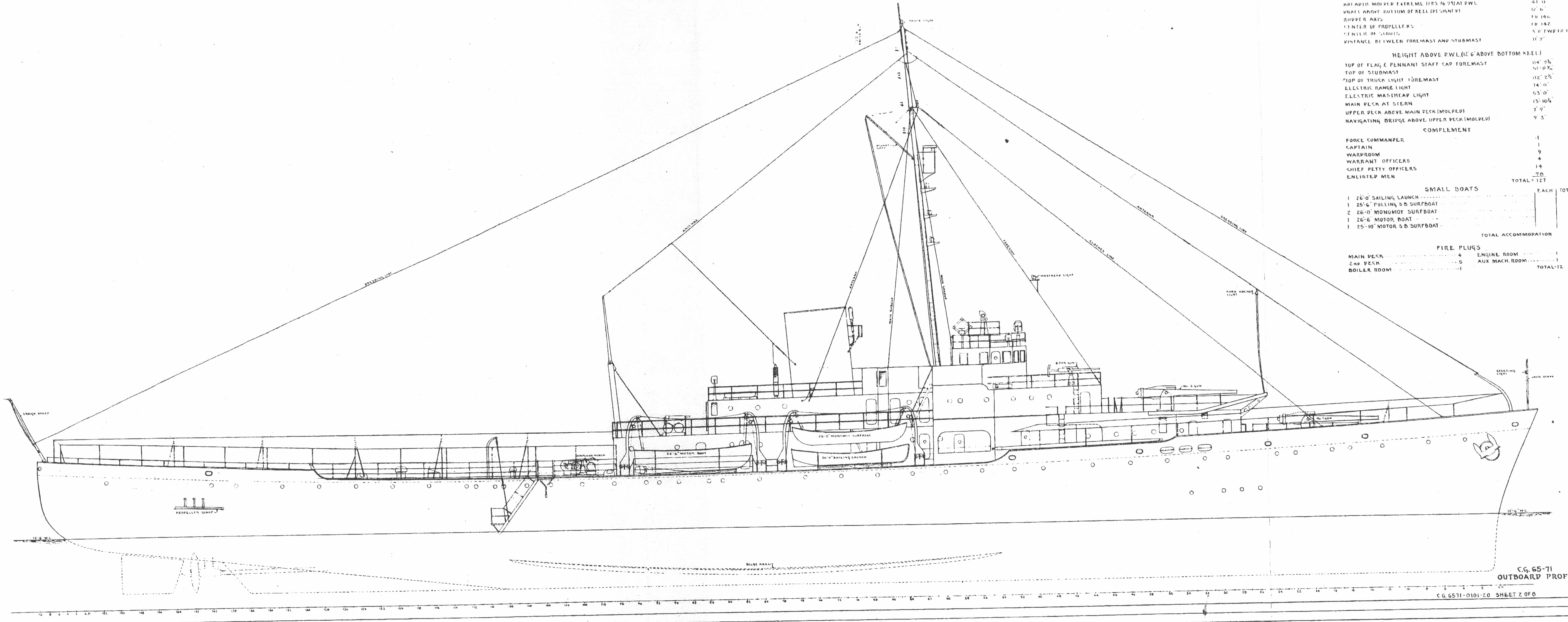
TRUCK LIGHT
ANCHOR LIGHT
ENSIGN STAFF
DRESSING LINE
ANTENNA
MAIN STAY
CLOTHES LINE
MASTHEAD LIGHT
FORD ANCHOR LIGHT
STEERING LIGHT
JACK STAFF
AIRPLANE WINCH
26'-6" MOTOR BOAT
26'-0" MONOMOY SURFBOAT
26'-0" SAILING LAUNCH
3 PDR GUN
No. 2 GUN
No. 1 GUN
PROPELLER GUARD
12'-6" W.L.
BILGE KEEL
10 8 6 4 2 A.P. 152 150 148 146 144 142 140 138 136 134 132 130 128 126 124 122 120 118 116 114 112 110 108 106 104 102 100 98 96 94 92

C.G. 65-71
OUTBOARD PROFILE

C.G. 6571-0101-20 SHEET 2 OF 8

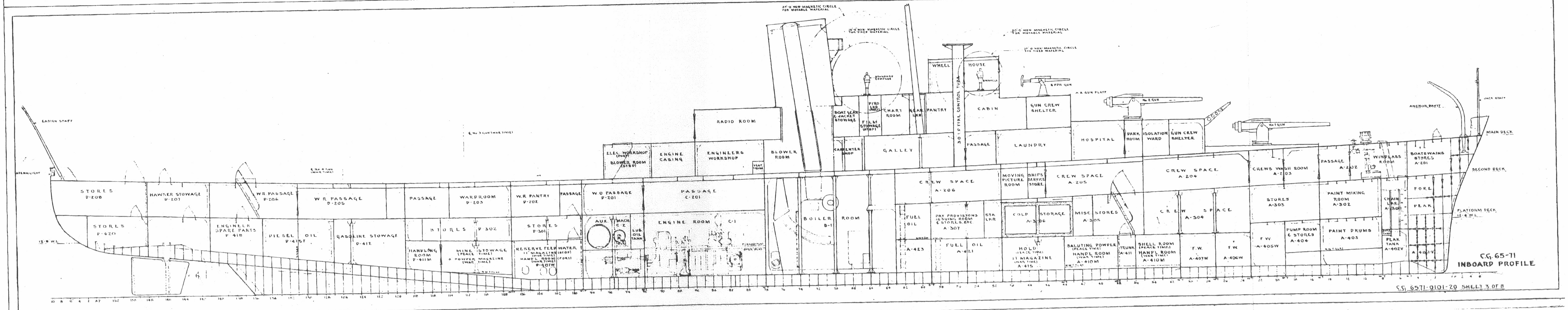
25'-0" NON-MAGNETIC CIRCLE FOR MOVABLE MATERIAL
18'-0" NON-MAGNETIC CIRCLE FOR FIXED MATERIAL
20'-0" NON-MAGNETIC CIRCLE FOR MOVABLE MATERIAL
10'-0" NON-MAGNETIC CIRCLE FOR FIXED MATERIAL
STANDARD COMPASS
BINNACLE
WHEEL HOUSE
3 PDR GUN
A.A. GUN PLATF.
No. 2 GUN
No. 1 GUN
ANCHOR DAVIT
JACK STAFF
MAIN DECK
SECOND DECK
PLATFORM DECK
12'-4" W.L.
ENSIGN STAFF
STERN LIGHT
12'-8" W.L.
℄ No. 4 GUN (WAR TIME)
℄ No. 3 GUN (WAR TIME)
STORES D-208
HAWSER STOWAGE D-207
W.R. PASSAGE D-206
W.R. PASSAGE D-205
PASSAGE
WARDROOM D-203
W.R. PANTRY D-202
PASSAGE
W.O. PASSAGE D-201
PASSAGE C-201
STORES D-420
ENGINEER SPARE PARTS D-418
DIESEL OIL D-415F
GASOLINE STOWAGE D-412
STORES D-302
STORES D-301
HANDLING ROOM D-411M
MINE STOWAGE (PEACE TIME) & POWDER MAGAZINE (WAR TIME)
RESERVE FEED WATER (STBD) (PORT)
11" MAGAZINE (WAR TIME)
HANDL. ROOM (WAR TIME) D-401W
AUX. MACH. C-2
LUB. OIL TANK
ENGINE ROOM C-1
ELEC. WORKSHOP (PORT)
BLOWER ROOM (STBD)
ENGINE CASING
ENGINEERS WORKSHOP
VENT TRUNK
RADIO ROOM
BLOWER ROOM
BOILER ROOM B-1
BOAT GEAR & JACKET STOWAGE
PYRO LKR (PORT)
FILM STOWAGE (STBD)
CHART ROOM
GEAR LKR
PANTRY
30" F. FIRE CONTROL TUBE
CABIN
GUN CREW SHELTER
CARPENTER SHOP
GALLEY
PASSAGE
LAUNDRY
HOSPITAL
DARK ROOM
ISOLATION WARD
GUN CREW SHELTER
CREW SPACE A-206
MOVING PICTURE ROOM
SHIPS SERVICE STORE
CREW SPACE A-205
CREW SPACE A-204
CREWS WASH ROOM A-203
PASSAGE A-202
WINDLASS ROOM
BOATSWAINS STORES A-201
FUEL OIL
DRY PROVISIONS ISSUING ROOM & STORES, ETC. A-307
STA. LKR
COLD STORAGE A-306
MISC. STORES A-305
CREW SPACE A-304
STORES A-303
PAINT MIXING ROOM A-302
CHAIN LKR. A-301
FORE PEAK
A-423
FUEL OIL A-421
HOLD (PEACE TIME) 11 MAGAZINE (WAR TIME) A-415
SALUTING POWDER (PEACE TIME) HANDL. ROOM (WAR TIME) A-410M
TRUNK A-411
SHELL ROOM (PEACE TIME) HANDL. ROOM (WAR TIME) A-410M
F.W. A-407W
F.W. A-406W
F.W. A-405W
PUMP ROOM & STORES A-404
PAINT DRUMS A-403
PEAK TANK A-402V
A-401V
10 8 6 4 2 A.P. 152 150 148 146 144 142 140 138 136 134 132 130 128 126 124 122 120 118 116 114 112 110 108 106 104 102 100 98 96 94 92 90 88 86 84 82 80 78 76 74 72 70 68 66 64 62 60 58 56 54 52 50 48 46 44 42 40 38 36 34 32 30 28 26 24 22 20 18 16 14 12 10 8 6 4 2 F.P. 2 4 6

C.G. 65-71
INBOARD PROFILE

C.G. 6571-0101-20 SHEET 3 OF 8